Power Torque Meter

1. Basic technical specifications

- Size: Disc-mounted 160x80x170mm;
- Instrument power supply:220VAC
- Display range:

  Torque measurement: -99999~99999N.m, absolute value display: 0~99999N.m, position of decimal point can be set

  Rotation speed display: 0~99999; decimal point position can be set

  Power display: 0～99999; decimal point can be automatically adjusted
- Pulse input signal: sensor signal output by all kinds of NPN, PNP, OC door, proximity switch, rotary encoder
- Transmitting Output
  - ✓ Optoelectronic isolation
  - ✓ 2-way 4mA~20mA DC current output. Output resolution: 1/4000; error ＜±0.2% F.S; load capacity:≤600Ω
  - ✓ External power supply

    ■Either ±15VDC or 24VDC
- Measuring frequency: Rotation speed pulse input 1Hz～20KHz

  Torque pulse input 5KHz～15KHz, can be extended to 1HZ~60KHZ
- Measuring refresh frequency: 30 times per second; suitable for rapid response occasion.

2. Panel and key descriptions

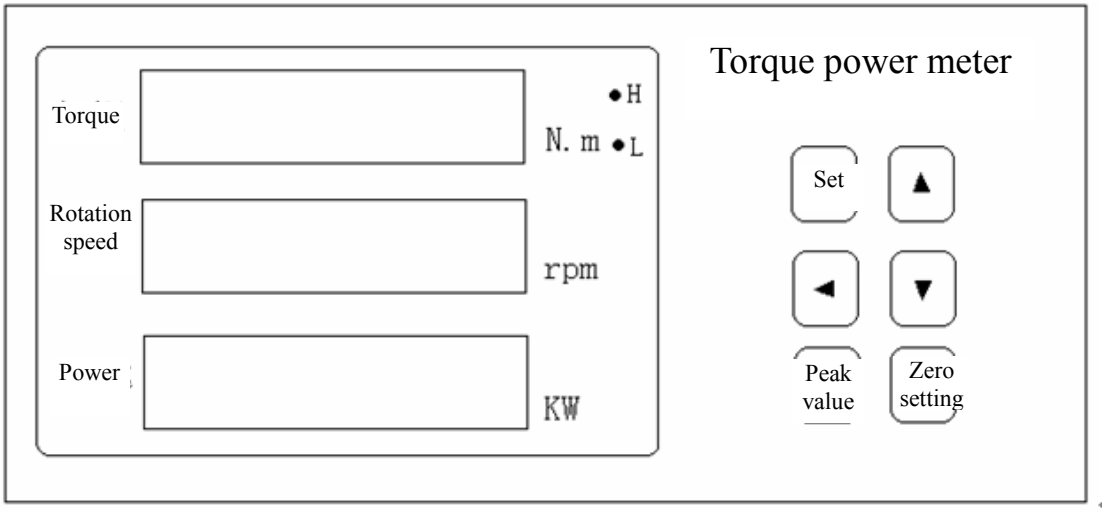

Name		Description
Display window	① First display window for measurements	• Display torque measurement • Display parameter symbols and values in parameter setting state • The end decimal point flashing means the peak display state
Display window	② Second display window for measurements	• Display rotation speed measurement • Blank in parameter setting state
Display window	③ Third display window for measurements	• Display power measurement • Blank in parameter setting state
④ Indicator light		• Alarm status of the torque alarm point and display peak sign
Operational keys	"Set" key	• Press it for more than 2s and do not release, and enter the setting state in the measuring condition • Display the next parameter by pressing it once while saving the previous parameters in the setting state
	"◀" Shift key	•Invalid in the measuring condition • In the setting state: ① Call out the original parameter values ② Move the modified bit
	"▲" Increase key	• Invalid in the measuring condition • Increase parameter values or change setting types in the setting state
	"▼" Reduce key	• Invalid in the measuring condition • Increase parameter values or change setting types in the setting state

3. Description of instrument parameters

Name	Content	Range of values	Description
OA	Password 1	0~99999	Do not set
OA1	Password 2	0~99999	Do not set
FLtr	Filtering coefficient	0~72	Factory default value is 00006. Appropriately increase the setting value when the fluctuation of torque measurement is large. The larger the setting value, the slower the refresh rate displays.
in-d	Decimal point position displayed by the torque	0~4	This parameter is only for the torque. If it is set as 1, it means 1 decimal kept; if it is set as 0, it means no decimals.
Lc	Torque range (absolute value)	256~99999	Torque display range
Fd	Division value setting	1~36	This parameter is helpful to show the stability. Definition: after the instrument determines the measurement is stable, it will display the actual value; later, when the measured value fluctuation is not greater than the setting value of this parameter, the display remains unchanged.
tr-d	Zero position tracking range	0~10	When the torque measurement is lower than the setting value and is stable at least over 1s, the measurement will be automatically cleared
in-d1	Rotation speed decimal point position	0~1	This parameter is only for the rotation speed. If it is set as 1, it means 1 decimal kept; if it is set as 0, it means no decimals.
Lc1	Transmitting range of rotation speed	0~10000	If it is set as 3000, it means the rotation speed is 0~3000 revolutions, and the corresponding transmitting output is 4~20mA
PULSE	The number of pulses per revolution	1~2000	Factory default value: 00060
1-1	Instrument absolute value measurement switch settings	0~1	If it is set as 1, it means the torque is displayed in the positive and negative directions; if it is set as 0, it means the torque is displayed in absolute value.
ADD	Communication address	1~99	Factory default value: 00001; the instrument communication address upon the communication with the computer
bsH	Transmitting range of torque	0~99999	Setting of transmitting output range of torque Note: When the display value is the absolute value, the transmitting output range is also the absolute value; when the torque is 0, the transmitting output is the lower limit value. When the display is the positive and reverse display and the measurement display is zero, correspond to the intermediate point of the output range.
ALSd	Alarm lock function switch	0~3	Set as 0: Alarm output is not locked; Set as 1: Alarm output is locked, and the alarm can only be released through the "**Zero setting"** key on the panel after alarm.
AL1	Setting value of alarm 1	-19999~99999	Set according to the customer needs; correspond to the AL1

Name	Content	Range of values	Description
			indicator light on the panel
AL1F	Alarm mode setting of alarm 1	0~1	Factory default value: 2 0 refers to the upper limit alarm (alarm above the setting value); 1 refers to the lower limit alarm (alarm below the setting value); 2 refers to the absolute upper limit alarm (alarm when the absolute value of measured value is greater than the setting value); 3 refers to the absolute lower limit alarm (alarm when the absolute value of measured value is lower than the setting value); Note: When the absolute alarm mode is set, parameter AL1 shall be set as positive value.
AL1HC	Return difference of alarm 1	0~20000	Difference value when exiting and entering into the alarm state 0 means no return difference function
AL1YS	Alarm delay setting of alarm 1	0~20.0 秒 0~20.0s	When displaying the value alarm, the relay outputs only after the delay setting; when exiting the alarm, the delay also works. When it is set as 0.0, it means no alarm delay function. This setting value is only for alarm 1.
AL2	Setting value of alarm 2	-19999~99999	Set according to the customer needs; correspond to the AL2 indicator light on the panel
AL2F	Alarm mode setting of alarm 2	0~1	Factory default value: 2 0 refers to the upper limit alarm (alarm above the setting value); 1 refers to the lower limit alarm (alarm below the setting value); 2 refers to the absolute upper limit alarm (alarm when the absolute value of measured value is greater than the setting value); 3 refers to the absolute lower limit alarm (alarm when the absolute value of measured value is lower than the setting value); Note: When the absolute alarm mode is set, parameter AL2 shall be set as positive value.
AL2HC	Return difference of alarm 2	0~20000	Difference value when exiting and entering into the alarm state; 0 means no return difference function
AL2YS	Alarm delay setting of alarm 2	0~20.0 秒 0~20.0s	When displaying the value alarm, the relay outputs only after the delay setting; when exiting the alarm, the delay also works. When it is set as 0.0, it means no alarm delay function. This setting value is only for alarm 2.

4. Instrument operation instruction

①. Press the “Set” key for more than 2s and do not release, and enter into the setting state; the instrument displays symbol of the first parameter

②. Press the “Set” key to sequentially select other parameters in this group

③. Press the ◄ key to call out the original setting values of the current parameters; the flicker bit is the correction bit

④. Move the modified bit through the ◄ key; increase the value through the ▲key; reduce the value through the ▼ key, and modify parameters to the required values

⑤. Press the “Set” key to save the modified parameter and go to the next parameter. If the parameter is the last one in this group, press the “Set” key to exit the setting state.

⑥. Repeat steps ② ~ ⑤ to set other parameters.

5. Function operation:

- Zero torque setting: Press the “Zero setting” key and do not release, until the torque is zero. This function is used to remove the zero drift of the sensor to achieve the best detection effect.
- Peak torque display: After pressing the “Peak value” key, the torque display window shows the peak value; when showing the peak value, the end digital flickers. After pressing the “Peak value” key again, the torque window returns to the real-time measured value of torque. And the peak value returns to zero after torque clearing operation or power failure.

6. Connection description

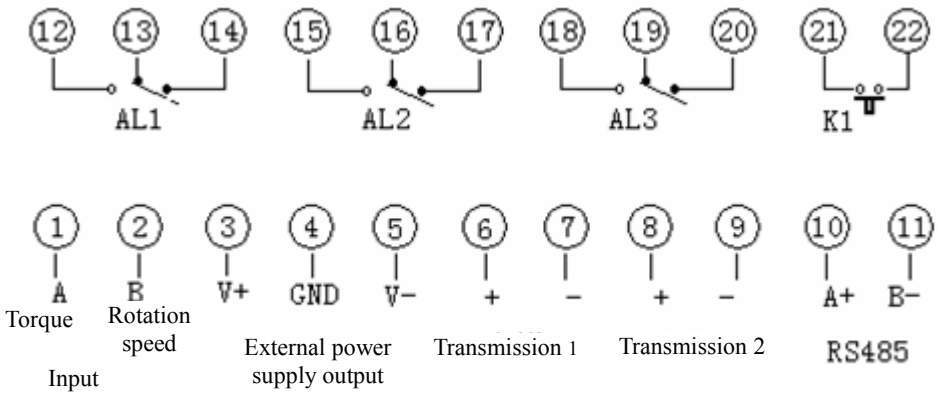

7. Hole opening: Disc-mounted

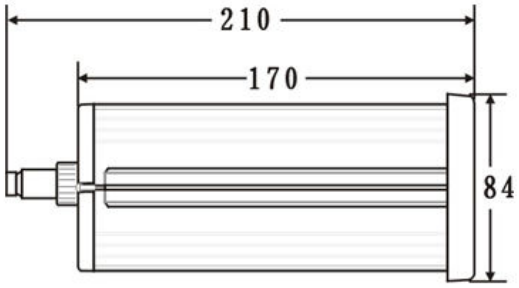

Standard shell side view

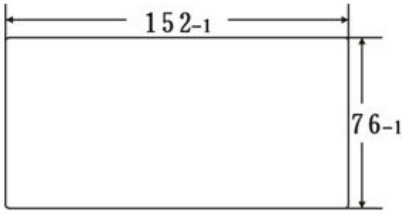

Horizontal opening size

8. Communication function:

Data format: The data format is the 10-bit format, including 1 start bit, 8 data bits without parity check bit and 1 stop bit.

Baud rate: The fixed Baud rate is 9600bps

Instrument communication address: Set by ADD parameters; the factory default is 01.

- All commands sent and received by the instrument are ASCII codes; common ASCII codes are shown in the Appendix: ASCII table.
- The instrument automatically identifies whether the command carries a check core. If the command sent by the host carries a check core, response of the instrument also carries a check core; all data transmitted are recommended to carry a check core, thus preventing erroneous data from being received and improving the overall stability of the system.
- About check core

Function: The check core helps check the command error from the computer to the instrument and answer error from the instrument to the computer. Adding 2 characters to the command and answer character string by the check core function will not affect the transfer rate.

Setting: Use of the check core does not need to set the instrument. The instrument automatically identifies whether the command sent by the computer carries a check core. If the command contains a check core, the instrument will automatically add 2-character check core when answering. This means that a computer can adopt the check core for some of the instruments in the network or some of the commands in a targeted way.

Format: Range of the check core is 00~FFH and is expressed in 2-bit ASCII code of 40H~4FH; and the check core is sent before the end mark "↵" (0D) of command or answer. If check core in the command sent by the computer is not correct, the instrument will not answer.

Calculation:

1. Check core of the command is the sum of ASCII code values of all commands. The remainder shall be kept when exceeding the range.

2. Check core answered is the sum of ASCII code values of all answers and ASCII code values on the instrument address. The remainder shall be kept when exceeding the range.

★All data transmitted are recommended to carry a check core, thus preventing erroneous data from being received and improving the overall stability of the system.

For example:

This example describes the sending and receiving formats as well as the calculation method for check core

Command: ＃0102NF↵

(I.e. send the hexadecimal to the instrument: 23 30 31 30 32 4E 46 0D)

Answer: =＋123.5LB↵

(I.e. the instrument sends the hexadecimal: 3D 2B 31 32 33 2E 35 4C 42 0D)

Check core to send the command character string is calculated as follows:

Check core ＝23H＋30H＋31H＋30H＋32H＝E6H

ASCII codes of #, 0, 1, 0 and 2 are respectively 23H, 30H, 31H, 30H and 32H; sum of these ASCII codes is E6H and is expressed in 4EH, 46H (i.e., N, F) by the 2-bit ASCII code of 40H~4FH.

Check core to answer the character string is calculated as follows (two-bit ASCII codes after sending the delimiter is the instrument address):

Check core ＝3DH＋2BH＋31H＋32H＋33H＋2EH＋35H＋41H＋30H＋31H

＝1C2H

ASCII codes of =, +, 1, 2, 3, •and 5 are respectively 3DH, 2BH, 31H, 32H,33H,2EH and 35H; sum of these ASCII codes plus the ASCII codes 30H and 31H of the instrument address is 1C2H with the remainder of C2H, and is expressed in 4CH, 42H (i.e., L, B) by the 2-bit ASCII code of 40H~4FH.

Command 1: #0101↙

It is the command of reading the torque. (The answer starts with “=” and ends with the carriage return character)

Command 2: #0102↙

It is the command of reading the rotation speed. (The answer starts with “=” and ends with the carriage return character)

Command 3: #0103↙

It is the command of reading the power (The answer starts with “=” and ends with the carriage return character)

All command characters are transmitted by means of ASCII code.

Command 4: #0104↙

It is the command of reading torque, rotation speed and power. After receiving this command, the instrument will transmit the three values back at a time; the transmission format is the same with the format for separate transmission of each circuit.

Appendix: Common ASCII codes used in communication

Hexadecimal	ASC II
20	Space
21	!
22	"
23	#
24	$
25	%
26	&
27	'
2B	+
2D	−
2E	•
30	0
31	1
32	2
33	3
34	4
35	5
36	6

Hexadecimal	ASC II
37	7
38	8
39	9
3A	:
3B	;
3C	<
3D	=
3E	>
3F	?
40	@
41	A
42	B
43	C
44	D
45	E
46	F
47	G
48	H

Hexadecimal	ASC II
49	I
4A	J
4B	K
4C	L
4D	M
4E	N
4F	O
50	P
51	Q
52	R
53	S
54	T
55	U
56	V
57	W
58	X
59	Y
5A	Z